Environmental Product Declaration (EPD)
According to ISO 14025 and EN 15804+A2:2019

Aluminium covered windows outward opened 55 mm sash (BYKO – WA55)

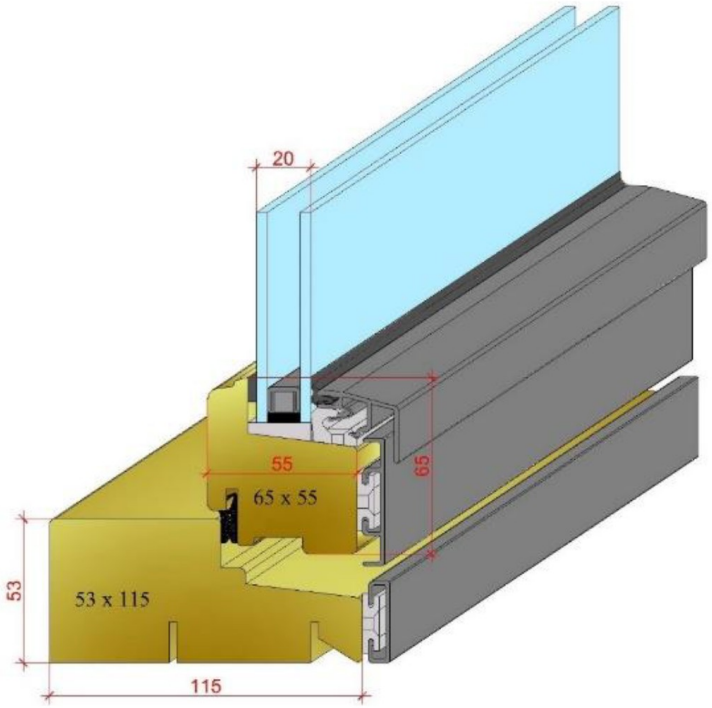

Registration number:	EPD-Kiwa-EE-264418-EN
Issue date:	21-09-2026
Valid until:	21-09-2026
Declaration owner:	Bitus Latvia SIA
Publisher:	Kiwa-Ecobility Experts
Programme operator:	Kiwa-Ecobility Experts
Status:	verified

1 General information

1.1 PRODUCT

Aluminium covered windows outward opened 55 mm sash (BYKO – WA55)

1.2 REGISTRATION NUMBER

EPD-Kiwa-EE-264418-EN

1.3 VALIDITY

Issue date: 21-09-2026

Valid until: 21-09-2026

1.4 PROGRAMME OPERATOR

Kiwa-Ecobility Experts
Wattstraße 11-13
13355 Berlin
DE

Raoul Mancke

(Head of programme operations, Kiwa-Ecobility Experts)

Dr. Ronny Stadie

(Verification body, Kiwa-Ecobility Experts)

1.5 OWNER OF THE DECLARATION

Declaration owner: Bitus Latvia SIA

Address: Lacplesa 75-5/6, LV-1011 Riga, Latvia

E-mail: info@bitus.lv

Website: https://bitus.lv/

Production location: Bitus Latvia SIA (DW)

Address production location: "JORVIKA", Koceni parish, LV-4220 Valmiera, Latvia

1.6 VERIFICATION OF THE DECLARATION

The independent verification is in accordance with the ISO 14025:2011. The LCA is in compliance with ISO 14040:2006 and ISO 14044:2006. The EN 15804+A2:2019 serves as the core PCR.

☐ Internal ☒ External

Lucas Pedro Berman, Senda

1.7 STATEMENTS

The owner of this EPD shall be liable for the underlying information and evidence. The programme operator Kiwa-Ecobility Experts shall not be liable with respect to manufacturer data, life cycle assessment data and evidence.

1.8 PRODUCT CATEGORY RULES

Kiwa-Ecobility Experts, General Programme Instructions “Product Level”, SOP EE 1201_R.4.0 (18.12.2025)

Kiwa-Ecobility Experts, General Programme Instructions “Product Level” – Annex B1 Environmental Information Programme according to EN 15804 / ISO 21930, SOP EE 1203_R. 4.0 (18.12.2025)

Product category rules for windows and pedestrian doorsets (EN 17213)

1 General information

1.9 COMPARABILITY

In principle, a comparison or assessment of the environmental impacts of different products is only possible if they have been prepared in accordance with EN 15804+A2:2019. For the evaluation of the comparability, the following aspects have to be considered in particular: PCR used, functional or declared unit, geographical reference, the definition of the system boundary, declared modules, data selection (primary or secondary data, background database, data quality), scenarios used for use and disposal phases, and the life cycle inventory (data collection, calculation methods, allocations, validity period). PCRs and general program instructions of different EPD program operators may differ. Comparability needs to be evaluated. For further guidance, see EN 15804+A2:2019 and ISO 14025.

1.10 CALCULATION BASIS

LCA method R<THINK: Ecobility Experts | EN15804+A2

Characterization method: RETHINK characterization method (see references for more details)

LCA database profiles: ecoinvent (for version see references)

Version database: v3.20f (20260507)

1.11 LCA BACKGROUND REPORT

This EPD is generated on the basis of the LCA background report 'Aluminium covered windows outward opened 55 mm sash (BYKO – WA55)' with the calculation identifier ReTHiNK-164418.

2 Product

2.1 PRODUCT DESCRIPTION

This is an average EPD for aluminium-covered windows, including outward-opening 55 mm sash windows (BYKO–WA55). The product is double glazed. All hardware components are fixed with screws to the sashes and frames. The window can be side-opening, top-opening or fixed. The dimensions (height × width) are manufactured according to individual customer requirements. The LCA inventory is based on the manufacturer's annual production data and is normalized to 1 m² of window area. The dimensions of the reference product are 1000 × 1000 mm.

The composition of the product is provided in the table below:

Material	value (%)
Wood	~29.4
Glass	~53.4
Metal (Steel + Aluminium)	~8.3
Plastics (TPE)	~0.1
Paint, impregnant, primer	~8.8

2.2 APPLICATION (INTENDED USE OF THE PRODUCT)

The intended uses are in domestic and commercial locations.

2.3 REFERENCE SERVICE LIFE

RSL PRODUCT

the product RSL has no effect on the calculation because the use phase was not declared.

USED RSL (YR) IN THIS LCA CALCULATION:

50

2.4 TECHNICAL DATA

The declared performances are reported in accordance with Regulation (EU) No 305/2011. The harmonized standard for windows and doors is EN 14351-1.

Characteristic	Value	Unit
Glass type	Flat glass, double glazing	-
Total weight*	~39	kg
Thickness	55	mm
Glass surface*	0.67	m²
Thermal transmittance (EN 10077-1:2017)	1.5/1.6	W/(m²*K)
Safety equipment	n.a.	-
Sound insulation	n.a.	-
Air permeability (EN 1026:2016)	Class 4	-
Watertightness (EN 1027:2016)	Class E1100	-
Resistance to wind load (EN 12210:2016)	Class C5	-
Racking (EN 14608:2004)	Class 2	-
Torsion (EN 14609:2004)	Class 2	-
Dangerous substances	None	-

*Reference size 1m²

2.5 SUBSTANCES OF VERY HIGH CONCERN

No substance present in the product with a contribution of more than 0.1 % of the total weight is present on the "Candidate List of Substances of Very High Concern" (SVHC) that are candidates for authorisation under REACH legislation.

2.6 DESCRIPTION OF THE PRODUCTION PROCESS

The production phase includes the following processes: wood cutting, planing, moulding and tapering, chiseling, impregnation of the wooden frame, assembly of wooden components, painting, installation of glass and hardware, and packaging. See also the simplified process flowchart.

2 Product

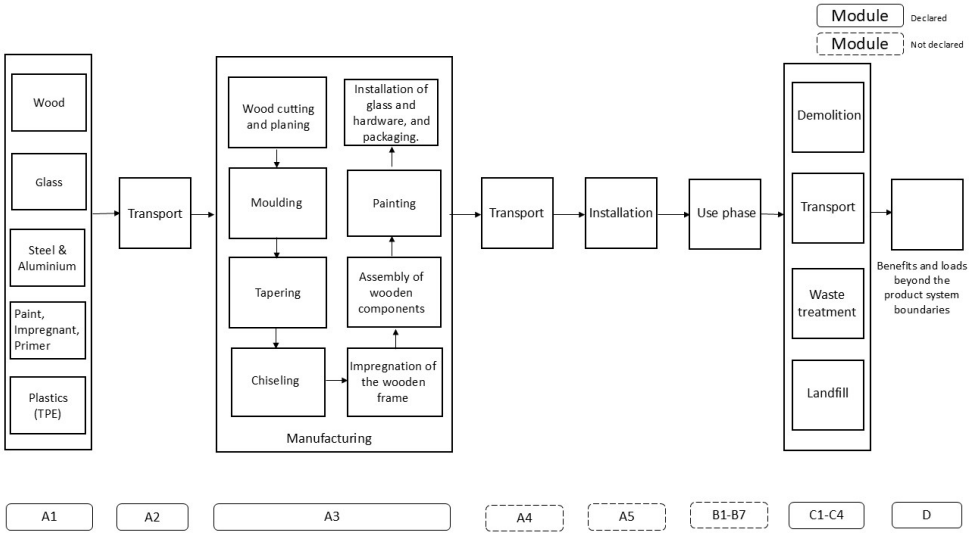
Module
Declared
Module
Not declared
Wood
Glass
Steel & Aluminium
Paint, Impregnant, Primer
Plastics (TPE)
Transport
Wood cutting and planing
Installation of glass and hardware, and packaging.
Moulding
Painting
Tapering
Assembly of wooden components
Chiseling
Impregnation of the wooden frame
Manufacturing
Transport
Installation
Use phase
Demolition
Transport
Waste treatment
Landfill
Benefits and loads beyond the product system boundaries
A1
A2
A3
A4
A5
B1-B7
C1-C4
D

3 Calculation rules

3.1 DECLARED UNIT

1 m² of 55 mm aluminium windows

1 m² of 55 mm aluminium windows has been selected as the declared unit for the LCA calculation.

Reference unit: m2

3.2 CONVERSION FACTORS

Description	Value	Unit
Reference unit	1	m2
Weight per reference unit	38.730	kg
Conversion factor to 1 kg	0.025820	m2

3.3 SCOPE OF DECLARATION AND SYSTEM BOUNDARIES

This is a Cradle-to-gate with modules C1-C4 and module D EPD. The life cycle stages included are as shown below:

(X = module included, ND = module not declared)

A1	A2	A3	A4	A5	B1	B2	B3	B4	B5	B6	B7	C1	C2	C3	C4	D
X	X	X	ND	ND	ND	ND	ND	ND	ND	ND	ND	X	X	X	X	X

The modules of the EN 15804 contain the following:

Module A1 = Raw material supply	Module B5 = Refurbishment
Module A2 = Transport	Module B6 = Operational energy use
Module A3 = Manufacturing	Module B7 = Operational water use
Module A4 = Transport	Module C1 = Deconstruction / Demolition
Module A5 = Construction - Installation process	Module C2 = Transport
Module B1 = Use	Module C3 = Waste Processing
Module B2 = Maintenance	Module C4 = Disposal
Module B3 = Repair	Module D = Benefits and loads beyond the product system boundaries
Module B4 = Replacement	

3.4 REPRESENTATIVENESS

This EPD is representative for Aluminium covered windows outward opened 55 mm sash (BYKO – WA55), a product of Bitus Latvia SIA. The results of this EPD are representative for European Union.

3.5 CUT-OFF CRITERIA

Product stage (A1-A3)

All input flows (e.g. raw materials, transportation, energy use, packaging, etc.) and output flows (e.g. production waste) are considered in this LCA. The total neglected input flows do therefore not exceed the limit of 5% of energy use and mass.

3 Calculation rules

End of life stage (C1-C4)

All input flows (e.g. energy use for demolition or disassembly, transport to waste processing, etc.) and output flows (e.g. end-of-life waste processing of the product, etc.) are considered in this LCA. The total neglected input flows do therefore not exceed the limit of 5% of energy use and mass.

Benefits and loads beyond the system boundary (Module D)

All benefits and loads beyond the system boundary resulting from reusable products, recyclable materials and/or useful energy carriers leaving the product system are considered in this LCA.

Excluded Elements from LCA Calculation:

The manufacture of equipment used in production, buildings or any other capital goods;

The transport of personnel to the plant;

The transportation of personnel within the plant;

Research and development activities;

Long-term emissions.

3.6 ALLOCATION

Allocations were avoided as far as possible. No by-products or co-products are produced during the manufacture of the analysed product. The energy requirements of production were allocated to the individual products on the basis of energy consumption measurements. Specific information on the allocations within the background data can be found in the documentation of the ecoinvent datasets.

3.7 DATA COLLECTION & REFERENCE PERIOD

All process-specific data were collected for the entire year 2025, covering the period from 1 January to 31 December 2025.

3.8 ESTIMATES AND ASSUMPTIONS

The calculation complies with the principles of polluter pays and modularity.

A payload factor of 50 percent was used for all truck transports, which corresponds to a full delivery and empty return trip. A data set for a non-specific truck was used for the supplier transportation.

A 2% manufacturing waste rate has been assumed for the plastic components (TPE seals), since separate measurement of the associated production waste was not feasible.

As the production waste of the metal and glass components was measured only as a combined waste stream and could not be determined separately for each material, an average manufacturing waste rate of 8% was applied in the calculations.

The demolition process for end-of-life products is assumed to require 0.043 MJ of diesel per kg of product, based on Debacker et al. (2012). This source was selected because it is recommended in the Product Environmental Footprint Category Rules (PEFCRs) for products used in buildings (2019).

For the end-of-life scenario, it is assumed that the different material fractions of the product can be separated and treated individually. Therefore, material-specific end-of-life scenarios based on the default assumptions of EN 17213 were applied.

- **Metal components:** 95% recycling and 5% landfill.
- **Wood components:** 95% incineration with energy recovery and 5% landfill.
- **Plastic components:** 95% incineration with energy recovery and 5% landfill.
- **Glass components:** 70% recycling and 30% landfill.

3.9 DATA QUALITY

All primary data were collected by Bitus Latvia SIA for the reference year of 2025.

For data that are outside the manufacturer's control, generic data were used. Secondary data were sourced from the regularly updated ecoinvent database (version 3.9.1), aligning with EN 15804 standards to ensure background data not exceeding 10 years.

R<THINK EPD web application was used to model the life cycle for the production and disposal of the declared product systems. To ensure that the results are comparable, consistent background data from the international database ecoinvent was used in the LCA (e.g., data records on energy, transport, auxiliary materials, and supplies). Almost all consistent data sets contained in the ecoinvent database are documented and can be viewed online.

3 Calculation rules

The scenarios included are currently in use and are representative for one of the most likely scenario alternatives.

According to the criteria of the "UN Environmental Global Guidance on LCA database development" mentioned in EN 15804+A2, the data quality for all three representativeness categories (geographical, technical and time) can be described as good.

3.10 POWER MIX

The electricity consumption in production (A3) was modeled using a market-based approach, applying the Latvia residual mix, whose shares were modeled based on statistics from AIB (2022) and has a total Global Warming Potential (GWP) of 0.45 kg CO_2 eq per kWh.

4 Scenarios and additional technical information

4.1 DE-CONSTRUCTION, DEMOLITION (C1)

The following information describes the scenario for demolition at end of life.

Description	Amount	Unit
(ei3.9.1) Diesel, burned in machine (incl. emissions)	0.046	l

4.2 TRANSPORT END-OF-LIFE (C2)

The following distances and transport conveyance are assumed for transportation during end of life for the different types of waste processing.

Waste Scenario	Transport conveyance	Not removed (stays in work) [km]	Landfill [km]	Incineration [km]	Recycling [km]	Re-use [km]
(ei3.9.1) End-of-life scenario for the wood fraction of the product, based on EN 17213 default assumptions	(ei3.9.1) Lorry (Truck), unspecified (default) | market group for (GLO)	0	100	150	50	0
(ei3.9.1) End-of-life scenario for the metal fraction of the product, based on EN 17213 default assumptions	(ei3.9.1) Lorry (Truck), unspecified (default) | market group for (GLO)	0	100	150	50	0
(ei3.9.1) End-of-life scenario for the glas fraction of the product, based on EN 17213 default assumptions	(ei3.9.1) Lorry (Truck), unspecified (default) | market group for (GLO)	0	100	150	50	0
(ei3.9.1) waste not applicable or evaporated (empty scenario) (NMD ID 26)	(ei3.9.1) Lorry (Truck), unspecified (default) | market group for (GLO)	0	0	0	0	0
(ei3.9.1) End-of-life scenario for the plastic fraction of the product, based on EN 17213 default assumptions	(ei3.9.1) Lorry (Truck), unspecified (default) | market group for (GLO)	0	100	150	50	0

The transport conveyance(s) used in the scenario(s) for transport during end of life has the following characteristics.

	Value and unit
Vehicle type used for transport	(ei3.9.1) Lorry (Truck), unspecified (default) | market group for (GLO)
Fuel type and consumption of vehicle	not available
Capacity utilisation (including empty returns)	50 % (loaded up and return empty)
Bulk density of transported products	inapplicable
Volume capacity utilisation factor	1

4 Scenarios and additional technical information

4.3 END OF LIFE (C3, C4)

The scenario(s) assumed for end of life of the product are given in the following tables. First the assumed percentages per type of waste processing are displayed, followed by the assumed amounts.

Waste Scenario	Region	Not removed (stays in work) [%]	Landfill [%]	Incineration [%]	Recycling [%]	Re-use [%]
(ei3.9.1) End-of-life scenario for the wood fraction of the product, based on EN 17213 default assumptions	EU	0	5	95	0	0
(ei3.9.1) End-of-life scenario for the metal fraction of the product, based on EN 17213 default assumptions	EU	0	5	0	95	0
(ei3.9.1) End-of-life scenario for the glas fraction of the product, based on EN 17213 default assumptions	EU	0	30	0	70	0
(ei3.9.1) waste not applicable or evaporated (empty scenario) (NMD ID 26)	NL	0	0	0	0	0
(ei3.9.1) End-of-life scenario for the plastic fraction of the product, based on EN 17213 default assumptions	EU	0	5	95	0	0

Waste Scenario	Not removed (stays in work) [kg]	Landfill [kg]	Incineration [kg]	Recycling [kg]	Re-use [kg]
(ei3.9.1) End-of-life scenario for the wood fraction of the product, based on EN 17213 default assumptions	0.000	0.737	14.012	0.000	0.000
(ei3.9.1) End-of-life scenario for the metal fraction of the product, based on EN 17213 default assumptions	0.000	0.160	0.000	3.030	0.000
(ei3.9.1) End-of-life scenario for the glas fraction of the product, based on EN 17213 default assumptions	0.000	6.207	0.000	14.483	0.000
(ei3.9.1) End-of-life scenario for the plastic fraction of the product, based on EN 17213 default assumptions	0.000	0.004	0.067	0.000	0.000
Total	**0.000**	**7.107**	**14.079**	**17.514**	**0.000**

4 Scenarios and additional technical information

4.4 BENEFITS AND LOADS BEYOND THE SYSTEM BOUNDARY (D)

The presented Benefits and loads beyond the system boundary in this EPD are based on the following calculated Net output flows in kilograms and Energy recovery displayed in MJ Lower Heating Value.

Waste Scenario	Net output flow [kg]	Energy recovery [MJ]
(ei3.9.1) End-of-life scenario for the wood fraction of the product, based on EN 17213 default assumptions	0.000	150.980
(ei3.9.1) End-of-life scenario for the metal fraction of the product, based on EN 17213 default assumptions	2.300	0.000
(ei3.9.1) End-of-life scenario for the glas fraction of the product, based on EN 17213 default assumptions	14.483	0.000
(ei3.9.1) waste not applicable or evaporated (empty scenario) (NMD ID 26)	0.000	0.000
(ei3.9.1) End-of-life scenario for the plastic fraction of the product, based on EN 17213 default assumptions	0.000	2.040
Total	**16.783**	**153.020**

5 Results

For the impact assessment long-term emissions (>100 years) are not considered. The results of the impact assessment are only relative statements that do not make any statements about end-points of the impact categories, exceedance of threshold values, safety margins or risks. The following tables show the results of the indicators of the impact assessment, of the use of resources as well as of waste and other output flows.

5.1 ENVIRONMENTAL IMPACT INDICATORS PER M2

CORE ENVIRONMENTAL IMPACT INDICATORS EN 15804+A2

Abbr.	Unit	A1	A2	A3	A1-A3	C1	C2	C3	C4	D
GWP-total	kg CO_2 eq.	3.77E+1	2.77E+0	3.71E+1	7.76E+1	1.63E-1	5.51E-1	2.34E+1	1.30E+0	-1.39E+0
GWP-f	kg CO_2 eq.	5.65E+1	2.76E+0	3.93E+1	9.86E+1	1.63E-1	5.49E-1	5.03E-1	4.59E-2	-1.49E+0
GWP-b	kg CO_2 eq.	-1.89E+1	8.98E-4	-2.23E+0	-2.11E+1	2.27E-5	1.79E-4	2.29E+1	1.25E+0	-1.80E-2
GWP-luluc	kg CO_2 eq.	3.47E-1	9.83E-3	5.01E-2	4.07E-1	1.84E-5	1.96E-3	3.14E-4	1.17E-5	1.14E-1
ODP	kg CFC 11 eq.	2.25E-6	4.91E-8	1.16E-6	3.46E-6	2.60E-9	9.77E-9	1.37E-8	3.72E-9	-5.97E-8
AP	mol H+ eq.	3.86E-1	1.32E-2	2.34E-1	6.33E-1	1.51E-3	2.63E-3	5.06E-3	3.08E-4	-2.33E-3
EP-fw	kg P eq.	3.94E-3	2.74E-5	9.03E-4	4.87E-3	5.90E-7	5.46E-6	6.42E-6	4.43E-7	2.12E-4
EP-m	kg N eq.	5.83E-2	5.02E-3	3.96E-2	1.03E-1	7.01E-4	9.99E-4	2.32E-3	1.47E-4	-4.57E-3
EP-T	mol N eq.	7.25E-1	5.35E-2	4.47E-1	1.23E+0	7.63E-3	1.07E-2	2.60E-2	1.36E-3	-1.14E-1
POCP	kg NMVOC eq.	2.21E-1	1.83E-2	1.60E-1	3.99E-1	2.26E-3	3.64E-3	7.04E-3	5.29E-4	-2.11E-2
ADP-mm	kg Sb-eq.	1.45E-3	8.63E-6	2.94E-4	1.75E-3	5.70E-8	1.72E-6	9.06E-7	5.17E-8	-2.22E-5
ADP-f	MJ	7.37E+2	3.95E+1	5.43E+2	1.32E+3	2.14E+0	7.86E+0	3.19E+0	1.12E+0	1.28E+1
WDP	m3 world eq.	1.72E+2	2.16E-1	3.22E+1	2.04E+2	4.61E-3	4.29E-2	1.22E-1	1.19E-2	-4.14E+0

GWP-total=Global Warming Potential total (GWP-total) | **GWP-f**=Global Warming Potential fossil fuels (GWP-fossil) | **GWP-b**=Global Warming Potential biogenic (GWP-biogenic) | **GWP-luluc**=Global Warming Potential land use and land use change (GWP-luluc) | **ODP**=Depletion potential of the stratosperic ozon layer (ODP) | **AP**=Acidification potential, Accumulated Exceedance (AP) | **EP-fw**=Eutrophication potential, fraction of nutrients reaching freshwater end compartment (EP-freshwater) | **EP-m**=Eutrophication potential, fraction of nutrients reaching marine end compartment (EP-marine) | **EP-T**=Eutrophication potential, Accumulated Exceedance (EP-terrestrial) | **POCP**=Formation potential of tropospheric ozone (POCP) | **ADP-mm**=Abiotic depletion potential for non fossil resources (ADP mm) | **ADP-f**=Abiotic depletion for fossil resources potential (ADP fossil) | **WDP**=Water (user) deprication potential, deprivation-weighted water consumption (WDP)

5 Results

ADDITIONAL ENVIRONMENTAL IMPACT INDICATORS EN 15804+A2

Abbr.	Unit	A1	A2	A3	A1-A3	C1	C2	C3	C4	D
PM	disease incidence	3.74E-4	2.72E-7	3.21E-5	4.06E-4	4.22E-8	5.42E-8	4.89E-8	7.31E-9	-2.51E-7
IR	kBq U235 eq.	2.26E+0	1.54E-2	1.09E+0	3.37E+0	4.38E-4	3.07E-3	6.69E-3	1.15E-3	1.90E-1
ETP-fw	CTUe	1.29E+3	2.91E+1	2.51E+2	1.57E+3	1.02E+0	5.80E+0	1.14E+1	1.83E+0	-3.24E+1
HTP-c	CTUh	8.96E-8	1.46E-9	2.94E-8	1.20E-7	5.00E-11	2.91E-10	5.02E-8	1.84E-11	4.44E-8
HTP-nc	CTUh	1.65E-6	3.17E-8	4.87E-7	2.17E-6	3.48E-10	6.32E-9	1.04E-8	4.40E-10	3.36E-7
SQP	Pt	2.31E+3	3.12E+1	7.85E+2	3.13E+3	1.44E-1	6.21E+0	1.92E+0	2.39E+0	-4.30E+2

PM=Potential incidence of disease due to PM emissions (PM) | **IR**=Potential Human exposure efficiency relative to U235 (IRP) | **ETP-fw**=Potential Comparative Toxic Unit for ecosystems (ETP-fw) | **HTP-c**=Potential Comparative Toxic Unit for humans (HTP-c) | **HTP-nc**=Potential Comparative Toxic Unit for humans (HTP-nc) | **SQP**=Potential soil quality index (SQP)

CLASSIFICATION OF DISCLAIMERS TO THE DECLARATION OF CORE AND ADDITIONAL ENVIRONMENTAL IMPACT INDICATORS

ILCD classification	Indicator	Disclaimer
ILCD type / level 1	Global warming potential (GWP)	None
	Depletion potential of the stratospheric ozone layer (ODP)	None
	Potential incidence of disease due to PM emissions (PM)	None
ILCD type / level 2	Acidification potential, Accumulated Exceedance (AP)	None
	Eutrophication potential, Fraction of nutrients reaching freshwater end compartment (EP-freshwater)	None
	Eutrophication potential, Fraction of nutrients reaching marine end compartment (EP-marine)	None
	Eutrophication potential, Accumulated Exceedance (EP-terrestrial)	None
	Formation potential of tropospheric ozone (POCP)	None
	Potential Human exposure efficiency relative to U235 (IRP)	1
ILCD type / level 3	Abiotic depletion potential for non-fossil resources (ADP-minerals&metals)	2
	Abiotic depletion potential for fossil resources (ADP-fossil)	2
	Water (user) deprivation potential, deprivation-weighted water consumption (WDP)	2
	Potential Comparative Toxic Unit for ecosystems (ETP-fw)	2
	Potential Comparative Toxic Unit for humans (HTP-c)	2
	Potential Comparative Toxic Unit for humans (HTP-nc)	2

5 Results

ILCD classification	Indicator	Disclaimer
	Potential Soil quality index (SQP)	2

Disclaimer 1 – This impact category deals mainly with the eventual impact of low dose ionizing radiation on human health of the nuclear fuel cycle. It does not consider effects due to possible nuclear accidents, occupational exposure nor due to radioactive waste disposal in underground facilities. Potential ionizing radiation from the soil, from radon and from some construction materials is also not measured by this indicator.

Disclaimer 2 – The results of this environmental impact indicator shall be used with care as the uncertainties on these results are high or as there is limited experienced with the indicator.

5.2 INDICATORS DESCRIBING RESOURCE USE AND ENVIRONMENTAL INFORMATION BASED ON LIFE CYCLE INVENTORY (LCI)

PARAMETERS DESCRIBING RESOURCE USE

Abbr.	Unit	A1	A2	A3	A1-A3	C1	C2	C3	C4	D
PERE	MJ	3.43E+2	5.58E-1	1.65E+2	5.09E+2	1.22E-2	1.11E-1	1.96E-1	2.63E-2	-7.15E+1
PERM	MJ	1.64E+2	0.00E+0	3.81E+1	2.03E+2	0.00E+0	0.00E+0	0.00E+0	0.00E+0	0.00E+0
PERT	MJ	5.08E+2	5.58E-1	2.04E+2	7.12E+2	1.22E-2	1.11E-1	1.96E-1	2.63E-2	-7.15E+1
PENRE	MJ	7.37E+2	3.95E+1	5.40E+2	1.32E+3	2.14E+0	7.87E+0	3.19E+0	1.12E+0	1.28E+1
PENRM	MJ	2.62E+1	0.00E+0	6.36E+0	3.26E+1	0.00E+0	0.00E+0	0.00E+0	0.00E+0	0.00E+0
PENRT	MJ	7.62E+2	3.95E+1	5.47E+2	1.35E+3	2.14E+0	7.87E+0	3.19E+0	1.12E+0	1.28E+1
SM	Kg	5.05E+0	0.00E+0	4.04E-1	5.45E+0	0.00E+0	0.00E+0	0.00E+0	0.00E+0	0.00E+0
RSF	MJ	0.00E+0	0.00E+0	0.00E+0	0.00E+0	0.00E+0	0.00E+0	0.00E+0	0.00E+0	0.00E+0
NRSF	MJ	0.00E+0	0.00E+0	0.00E+0	0.00E+0	0.00E+0	0.00E+0	0.00E+0	0.00E+0	0.00E+0
FW	m^3	4.49E+0	9.54E-3	1.83E+0	6.33E+0	1.68E-4	1.90E-3	9.20E-3	1.30E-3	4.15E-2

PERE=Use of renewable primary energy excluding renewable primary energy resources used as raw materials | **PERM**=Use of renewable primary energy resources used as raw materials | **PERT**=Total use of renewable primary energy resources | **PENRE**=Use of non-renewable primary energy excluding non-renewable primary energy resources used as raw materials | **PENRM**=Use of non-renewable primary energy resources used as raw materials | **PENRT**=Total use of non-renewable primary energy resources | **SM**=Use of secondary material | **RSF**=Use of renewable secondary fuels | **NRSF**=Use of non-renewable secondary fuels | **FW**=Net use of fresh water

5 Results

OTHER ENVIRONMENTAL INFORMATION DESCRIBING WASTE CATEGORIES

Abbr.	Unit	A1	A2	A3	A1-A3	C1	C2	C3	C4	D
HWD	Kg	4.56E-3	2.52E-4	2.27E-3	7.08E-3	1.44E-5	5.01E-5	2.09E-5	4.71E-6	-4.07E-4
NHWD	Kg	1.16E+1	2.61E+0	5.40E+0	1.97E+1	3.06E-3	5.20E-1	1.47E+1	7.11E+0	1.72E+0
RWD	Kg	1.86E-3	9.04E-6	8.00E-4	2.67E-3	2.34E-7	1.80E-6	4.93E-6	1.35E-6	1.53E-4

HWD=Hazardous waste disposed | **NHWD**=Non-hazardous waste disposed | **RWD**=Radioactive waste disposed

ENVIRONMENTAL INFORMATION DESCRIBING OUTPUT FLOWS

Abbr.	Unit	A1	A2	A3	A1-A3	C1	C2	C3	C4	D
CRU	Kg	0.00E+0	0.00E+0	0.00E+0	0.00E+0	0.00E+0	0.00E+0	0.00E+0	0.00E+0	0.00E+0
MFR	Kg	5.16E-1	0.00E+0	1.50E+0	2.02E+0	0.00E+0	0.00E+0	1.75E+1	0.00E+0	0.00E+0
MER	Kg	0.00E+0	0.00E+0	0.00E+0	0.00E+0	0.00E+0	0.00E+0	0.00E+0	0.00E+0	0.00E+0
EET	MJ	4.91E-3	0.00E+0	4.20E+0	4.20E+0	0.00E+0	0.00E+0	0.00E+0	0.00E+0	4.74E+1
EEE	MJ	4.74E-2	0.00E+0	2.44E+0	2.49E+0	0.00E+0	0.00E+0	0.00E+0	0.00E+0	2.75E+1

CRU=Components for re-use | **MFR**=Materials for recycling | **MER**=Materials for energy recovery | **EET**=Exported Energy, Thermic | **EEE**=Exported Energy, Electric

5 Results

5.3 INFORMATION ON BIOGENIC CARBON CONTENT PER M2

BIOGENIC CARBON CONTENT

The following Information describes the biogenic carbon content in (the main parts of) the product at the factory gate per m2:

Biogenic carbon content	Amount	Unit
Biogenic carbon content in the product	5.164	kg C
Biogenic carbon content in accompanying packaging	0.7	kg C

UPTAKE OF BIOGENIC CARBON DIOXIDE

The following amount of carbon dioxide uptake is taken into account. Related uptake and release of carbon dioxide in downstream processes are not taken into account in this number although they do appear in the presented results. One kilogram of biogenic Carbon content is equivalent to 44/12 kg of biogenic carbon dioxide uptake.

Uptake Biogenic Carbon dioxide	Amount	Unit
Product	18.93	kg CO2 (biogenic)
Packaging	2.567	kg CO2 (biogenic)

6 Interpretation of results

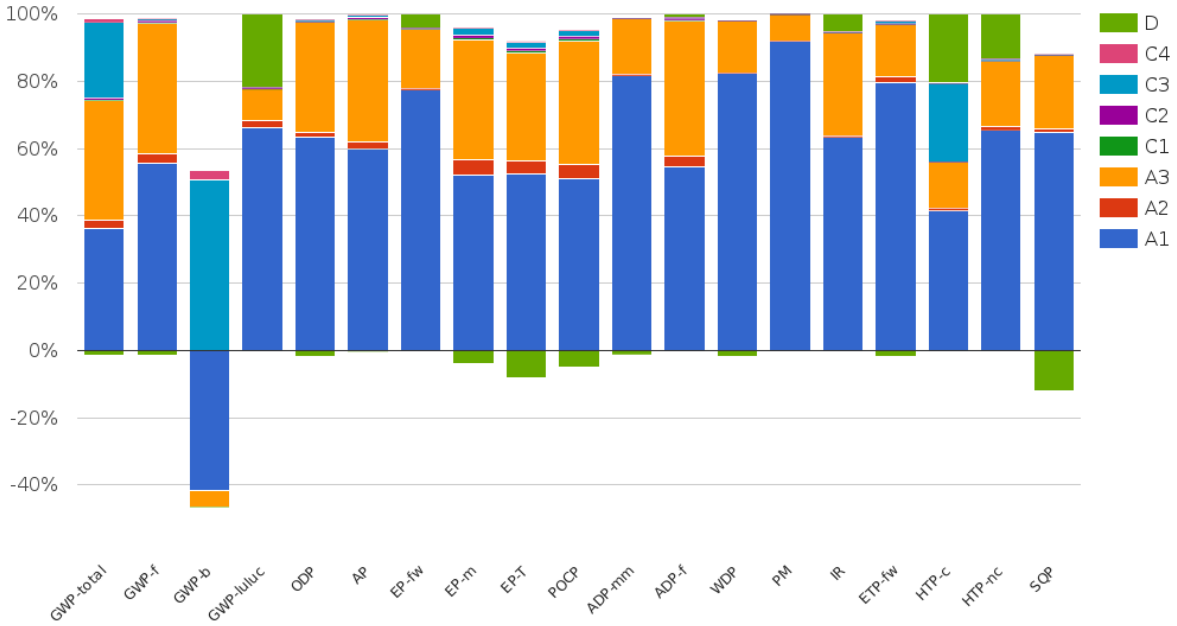

The figure illustrates the environmental impacts for 1 m² of BYKO-WA55.

As shown, the contributions from raw materials (A1) and manufacturing (A3) are notably higher, while transportation (A2) has a comparatively minor impact.

Among the raw materials, aluminum and glass have the highest contributions to GWP, while the wood component has a negative GWP contribution due to the biogenic carbon stored in the wood. Together with the contributions from other metal components and materials, these factors determine the overall GWP results presented in the results table.

The impacts in module A3 are mainly associated with energy consumption during the manufacturing process.

6 Interpretation of results

For most indicators, Module D indicates environmental benefits beyond the system boundaries

7 References

ISO 14040
ISO 14040:2006-10, Environmental management - Life cycle assessment - Principles and framework; EN ISO 14040:2006

ISO 14044
ISO 14044:2006-10, Environmental management - Life cycle assessment - Requirements and guidelines; EN ISO 14044:2006

ISO 14025
ISO 14025:2011-10, Environmental labels and declarations — Type III environmental declarations — Principles and procedures

EN 15804+A2
EN 15804:2012+A2:2019/AC:2021, Sustainability of Construction Works- Environmental Product Declarations - Core rules for the product category of construction products

Kiwa-EE GPI R.4.0
Kiwa-Ecobility Experts, General Programme Instructions “Product Level”, SOP EE 1201_R.4.0 (18.12.2025)

Kiwa-EE GPI R.4.0 Annex B1
Kiwa-Ecobility Experts, General Programme Instructions “Product Level” – Annex B1 Environmental Information Programme according to EN 15804 / ISO 21930 , SOP EE 1203_R.4.0 (18.12.2025)

DIN EN 17213
DIN EN 17213:2026-01, Windows and doors — Environmental Product Declarations — Product category rules for windows and pedestrian doorsets

ecoinvent
ecoinvent Version 3.9.1 (December 2022)

R<THINK characterization method
ecoinvent 3.9.1: EN 15804+A1 indicators (CML-IA Baseline v3.09), EN 15804+A2 indicators (EF 3.1)

EN 14351-1:2006+A2:2016
EN 14351-1:2006+A2:2016, Windows and doors Product standard, performance characteristics, Part 1: Windows and external pedestrian doorsets without resistance to fire characteristics

8 Contact information

Publisher	Operator	Owner of declaration
Kiwa-Ecobility Experts Wattstraße 11-13 13355 Berlin, DE	**Kiwa-Ecobility Experts** Wattstraße 11-13 13355 Berlin, DE	**Bitus Latvia SIA** Lacplesa 75-5/6 LV-1011 Riga, Latvia, LV
E-mail: DE.Ecobility.Experts@kiwa.com **Website:** https://www.kiwa.com/de/en-de/areas-of-expertise/sustainable-solutions/ecobility-experts-epd-program/	**E-mail:** DE.Ecobility.Experts@kiwa.com **Website:** https://www.kiwa.com/de/en-de/areas-of-expertise/sustainable-solutions/ecobility-experts-epd-program/	**E-mail:** info@bitus.lv **Website:** https://bitus.lv/

Kiwa-Ecobility Experts is established member of the ECO PLATFORM